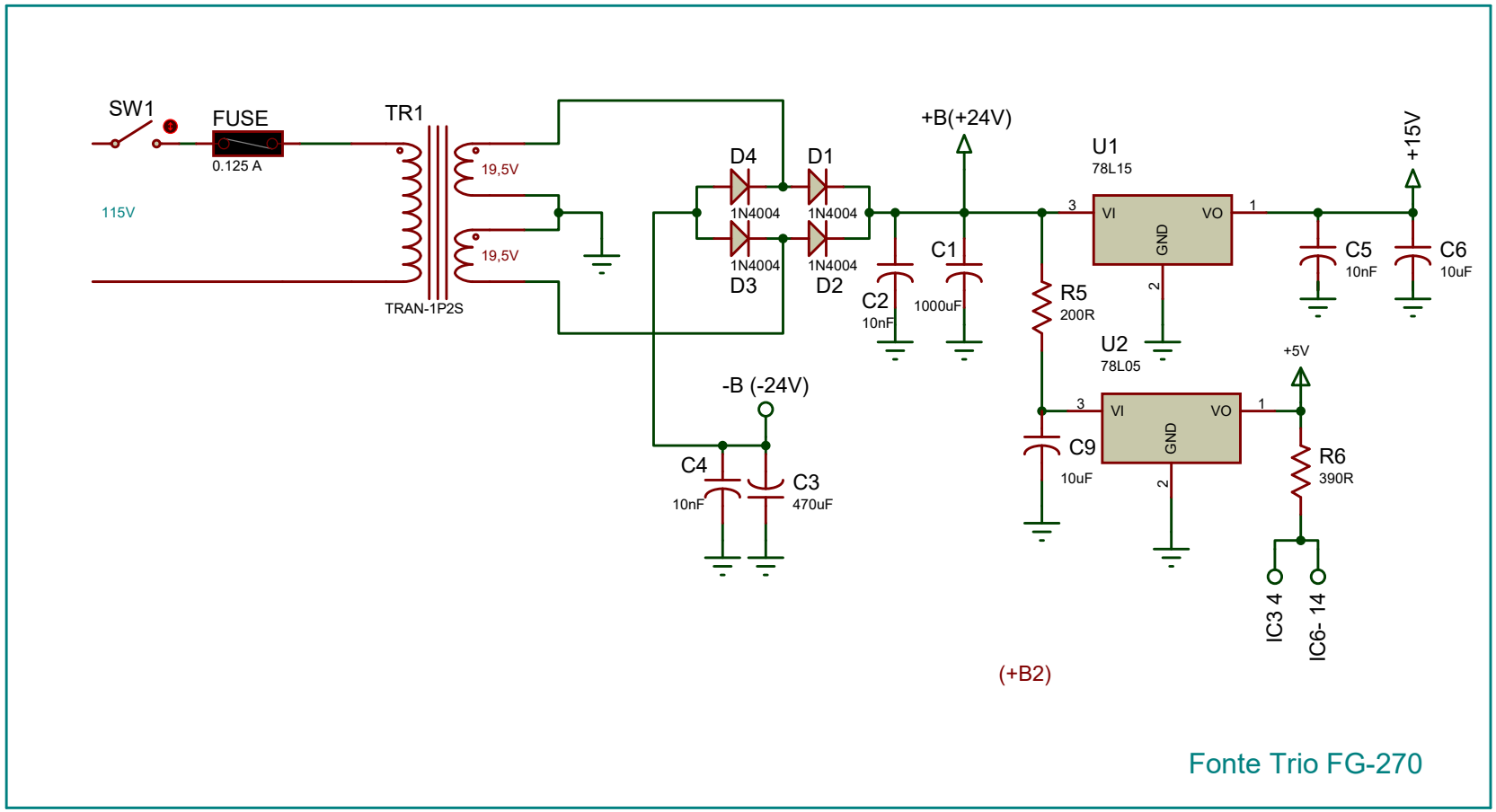
SW1
FUSE
0.125 A
115V
TR1
TRAN-1P2S
19,5V
19,5V
D4
D1
1N4004
1N4004
1N4004
1N4004
D3
D2
+B(+24V)
C2
10nF
C1
1000uF
R5
200R
U1
78L15
VI
VO
GND
3
1
2
U2
78L05
VI
VO
GND
3
1
2
C9
10uF
+15V
C5
10nF
C6
10uF
+5V
R6
390R
IC3 4
IC6- 14
-B (-24V)
C4
10nF
C3
470uF
(+B2)
Fonte Trio FG-270

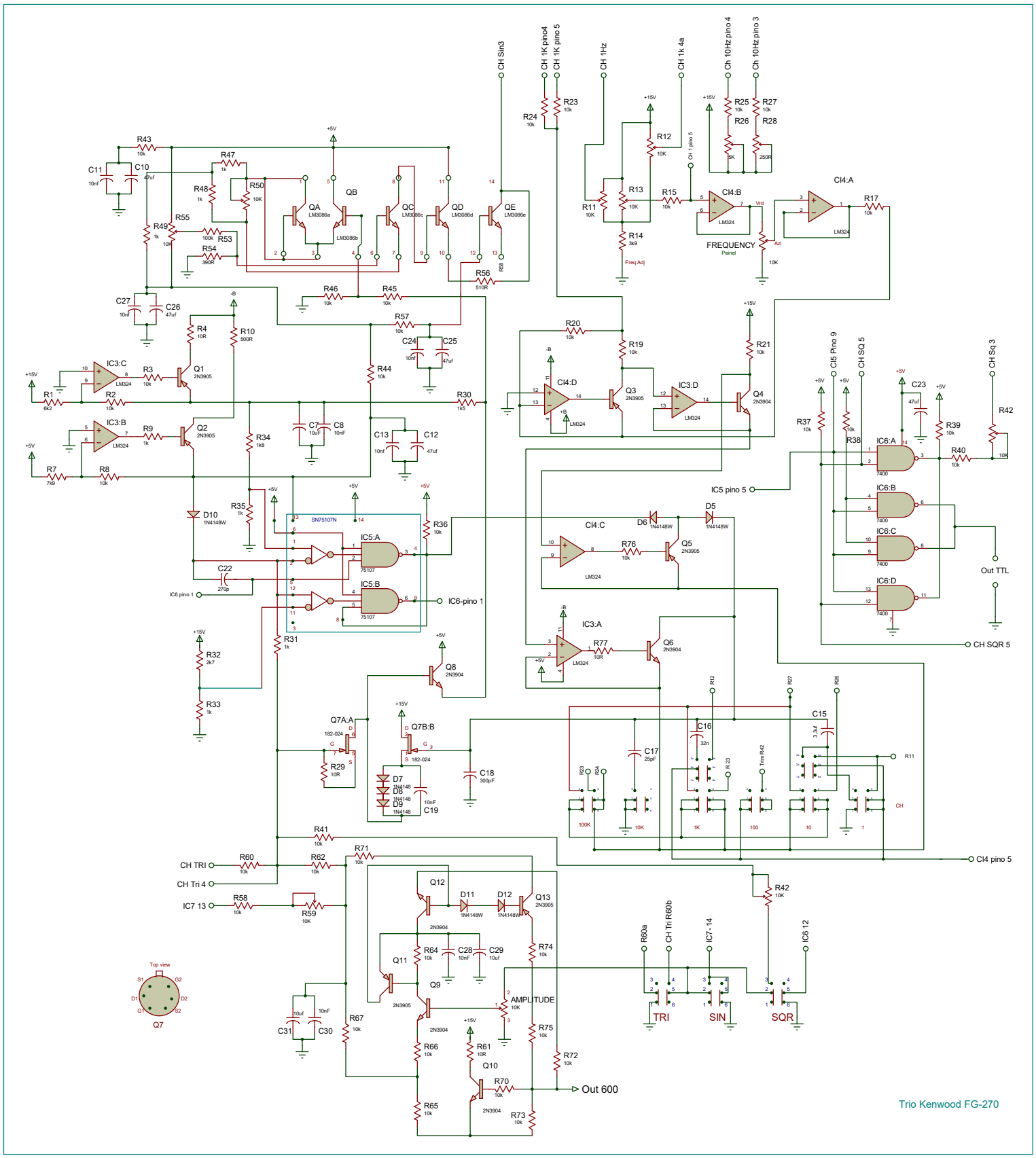
CH Sin3
CH 1K pino4
CH 1K pino 5
CH 1Hz
CH 1k 4a
Ch 10Hz pino 4
Ch 10Hz pino 3
R24 10k
R23 10k
R25 10k
R27 10k
R26 5K
R28 250R
R12 10K
R13 10K
R11 10K
R14 3k9
Freq Adj
R15 10k
CI4:B
LM324
FREQUENCY
Painel
CI4:A
R17 10k
R43 10k
C11 10nf
C10 47uf
R47 1k
R48 1k
R50 10K
R49 1k
R55 10K
R53 100k
R54 390R
QA LM3086a
QB LM3086b
QC LM3086c
QD LM3086d
QE LM3086e
R56 510R
R46 10k
R45 10k
C27 10nf
C26 47uf
R4 10R
R10 500R
R57 10k
C24 10nf
C25 47uf
R44 10k
IC3:C
R3 10k
Q1 2N3905
R1 6k2
R2 10k
R30 1k5
IC3:B
R9 1k
Q2 2N3905
R34 1k8
C7 10uF
C8 10nF
C13 10nf
C12 47uf
R7 7k5
R8 10k
D10 1N4148W
R35 1k
SN75107N
IC5:A
IC5:B
75107
R36 10k
C22 270p
IC6 pino 1
IC6-pino 1
R31 1k
R32 2k7
R33 1k
Q8 2N3904
Q7A:A
182-024
Q7B:B
R29 10R
D7 1N4148
D8 1N4148
D9 1N4148
C18 300pF
C19 10nF
R20 10k
R19 10k
CI4:D
Q3 2N3905
IC3:D
R21 10k
Q4 2N3904
CI4:C
D6 1N4148W
D5 1N4148W
R76 10k
Q5 2N3905
IC3:A
R77 10R
Q6 2N3904
CI5 Pino 9
CH SQ 5
CH Sq 3
R37 10k
R38 10k
C23 47uf
R39 10k
R42 10K
IC6:A
IC6:B
IC6:C
IC6:D
7400
R40 10k
IC5 pino 5
Out TTL
CH SQR 5
C15 3.3uf
C16 32n
C17 25pF
R23
R24
Trim R42
R11
CH
100K
10K
1K
100
10
1
CI4 pino 5
R41 10k
R71 10k
CH TRI
R60 10k
R62 10k
CH Tri 4
IC7 13
R58 10k
R59 10K
Q12
D11 1N4148W
D12 1N4148W
Q13 2N3905
R64 10k
C28 10nF
C29 10uf
R74 10k
Q11
Q9
AMPLITUDE 10K
R75 10k
R72 10k
R66 10k
R61 10R
Q10
R70 10k
Out 600
R65 10k
R73 10k
R67 10k
C31 10uf
C30 10nF
Top view
Q7
R60a
CH Tri R60b
IC7-14
IC6 12
TRI
SIN
SQR
Trio Kenwood FG-270